STUDIOTWENTYSEVEN

HASTA LAMP BY **JAN GARNCAREK**
NUMBERED EDITION
SERIAL NUMBER AND CERTIFICATE OF AUTHENTICITY

MOUTH BLOWN GLASS
NICKEL COATING, COPPER COATING, WAXED OR AGED BRASS
E27 BULB
10W
110V-240V
1000LM
2700K
DIMMABLE
CE CERTIFIED
PRODUCTION TIME 10-12 WEEKS
HANDCRAFTED IN POLAND

IN	H 30.7	W 47.2	D 9.8
CM	H 78	W 120	D 25

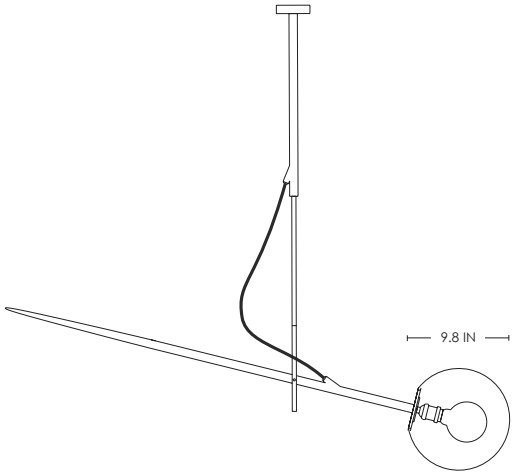
9.8 IN

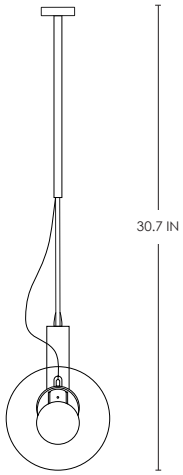
30.7 IN

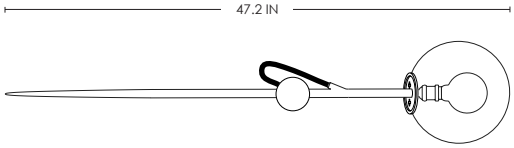
47.2 IN