STUDIOTWENTYSEVEN

LE MINITORE ARMCHAIR BY **PIERRE AUGUSTIN ROSE**

FABRIC BY PIERRE FREY
BLACK SEMI-GLOSS PAINTED OAK LEGS
PRODUCTION TIME 14-16 WEEKS
HANDCRAFTED IN FRANCE

IN	H 27.9	W 36.2	D 37.4	SH 16.5
CM	H 71	W 92	D 95	SH 42

NEW YORK MIAMI LONDON BY APPOINTMENT ONLY ENQUIRE@STUDIOTWENTYSEVEN.COM WWW.STUDIOTWENTYSEVEN.COM

STUDIOTWENTYSEVEN

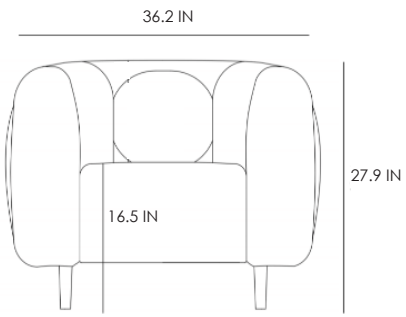

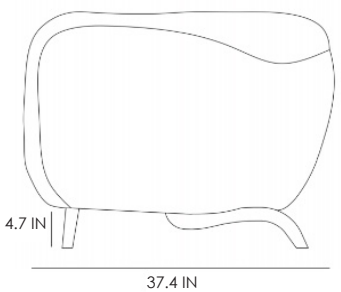

NATURAL LACQUER
OAK

BLACK LACQUER
OAK

WALNUT LACQUER
OAK

MAHOGANY LACQUER
OAK